5A 180KHz 36V Buck DC to DC Converter XL4015

Features

- Wide 8V to 36V Input Voltage Range
- Output Adjustable from 1.25V to 32V
- Maximum Duty Cycle 100%
- Minimum Drop Out 0.3V
- Fixed 180KHz Switching Frequency
- 5A Constant Output Current Capability
- Internal Optimize Power MOSFET
- High efficiency up to 96%
- Excellent line and load regulation
- Built in thermal shutdown function
- Built in current limit function
- Built in output short protection function
- Available in TO263-5L package

Applications

- LCD Monitor and LCD TV
- Portable instrument power supply
- Telecom / Networking Equipment

General Description

The XL4015 is a 180 KHz fixed frequency PWM buck (step-down) DC/DC converter, capable of driving a 5A load with high efficiency, low ripple and excellent line and load regulation. Requiring a minimum number of external components, the regulator is simple to use and include internal frequency compensation and a fixed-frequency oscillator.

The PWM control circuit is able to adjust the duty ratio linearly from 0 to 100%. An over current protection function is built inside. When short protection function happens, the operation frequency will be reduced from 180KHz to 48KHz. An internal compensation block is built in to minimize external component count.

TO263-5L

Figure1. Package Type of XL4015

深圳市森利威尔电子有限公司
联系人：曾生
联系电话：13534002546
移动QQ：2355368875

Pin Configurations

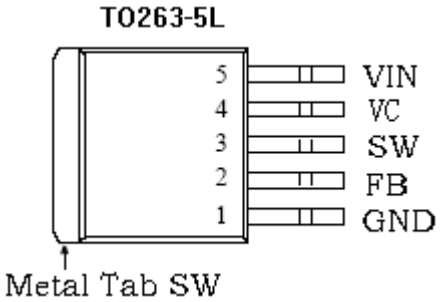

Figure2. Pin Configuration of XL4015 (Top View)

Table 1 Pin Description

Pin Number	Pin Name	Description
1	GND	Ground Pin. Care must be taken in layout. This pin should be placed outside of the Schottky Diode to output capacitor ground path to prevent switching current spikes from inducing voltage noise into XL4015.
2	FB	Feedback Pin (FB). Through an external resistor divider network, FB senses the output voltage and regulates it. The feedback threshold voltage is 1.25V.
3	SW	Power Switch Output Pin (SW). SW is the switch node that supplies power to the output.
4	VC	Internal Voltage Regulator Bypass Capacity. In typical system application, The VC pin connect a 1uf capacity to VIN.
5	VIN	Supply Voltage Input Pin. XL4015 operates from a 8V to 36V DC voltage. Bypass Vin to GND with a suitably large capacitor to eliminate noise on the input.

深圳市森利威尔电子有限公司
联系人：曾生
联系电话：13534002546
移动QQ：2355368875

Function Block

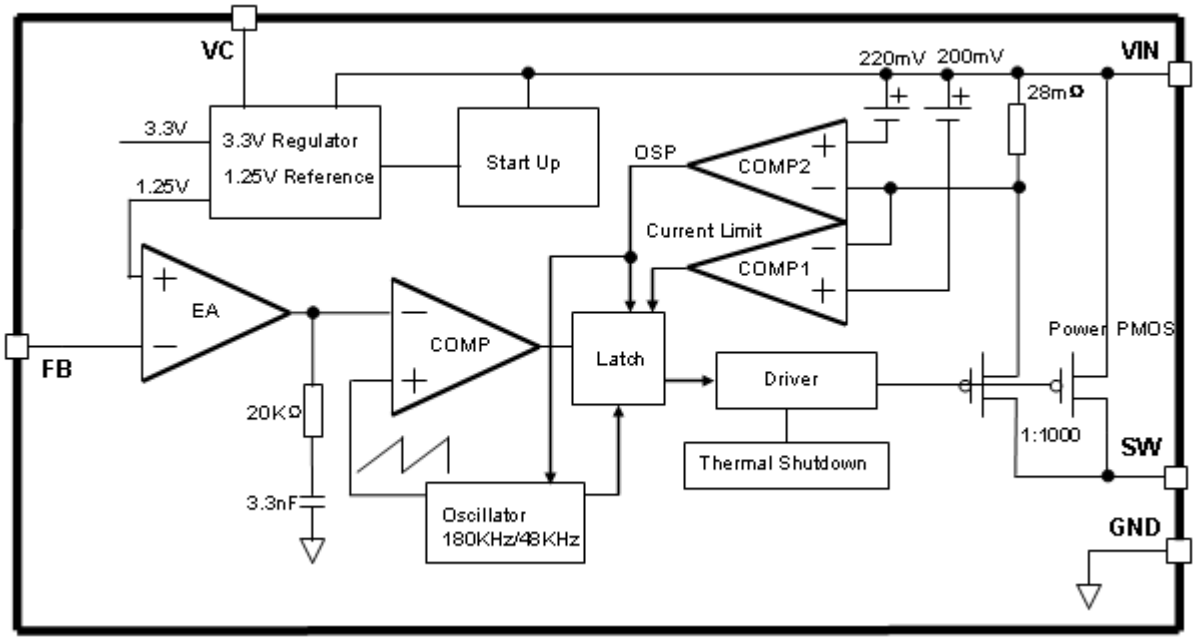

Figure3. Function Block Diagram of XL4015

Typical Application Circuit

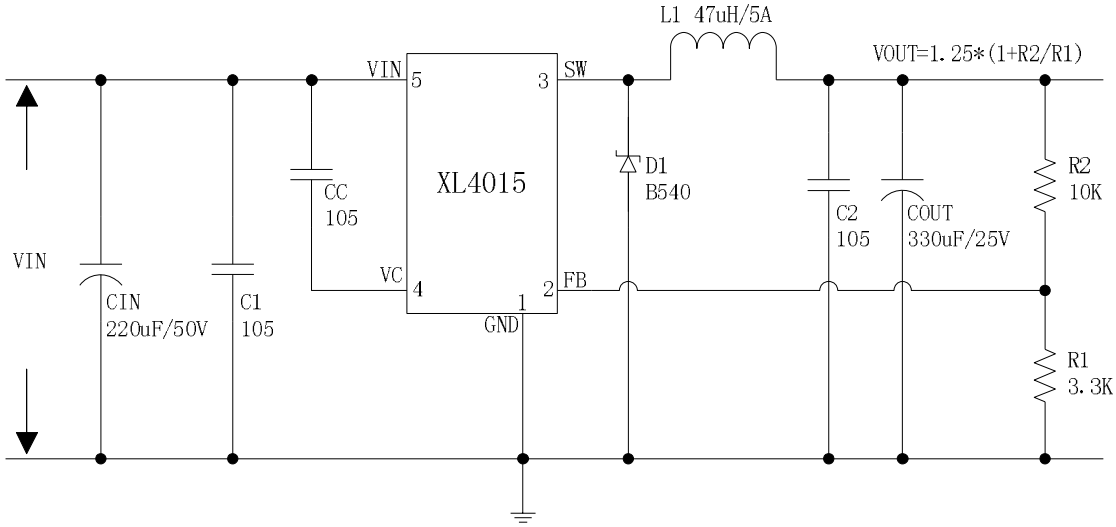

Figure4. XL4015 Typical Application Circuit (VIN=8V~36V, VOUT=5V/5A)

深圳市森利威尔电子有限公司
联系人：曾生
联系电话：13534002546
移动QQ：2355368875

Ordering Information

Package	Temperature Range	Part Number	Marking ID	Packing Type
		Lead Free	Lead Free	
		XL4015E1	XL4015E1	800 Units on Tape & Reel

XLSEMI Pb-free products, as designated with "E1" suffix in the par number, are RoHS compliant.

Absolute Maximum Ratings（Note1）

Parameter	Symbol	Value	Unit
Input Voltage	Vin	-0.3 to 40	V
Feedback Pin Voltage	V_{FB}	-0.3 to Vin	V
Output Switch Pin Voltage	V_{Output}	-0.3 to Vin	V
Power Dissipation	P_D	Internally limited	mW
Thermal Resistance (TO263-5L) (Junction to Ambient, No Heatsink, Free Air)	R_{JA}	30	ºC/W
Operating Junction Temperature	T_J	-40 to 125	ºC
Storage Temperature	T_{STG}	-65 to 150	ºC
Lead Temperature (Soldering, 10 sec)	T_{LEAD}	260	ºC
ESD (HBM)		>2000	V

Note1: Stresses greater than those listed under Maximum Ratings may cause permanent damage to the device. This is a stress rating only and functional operation of the device at these or any other conditions above those indicated in the operation is not implied. Exposure to absolute maximum rating conditions for extended periods may affect reliability.

深圳市森利威尔电子有限公司
联系人：曾生
联系电话：13534002546
移动QQ：2355368875

XL4015 Electrical Characteristics

T_a = 25℃;unless otherwise specified.

Symbol	Parameter	Test Condition	Min.	Typ.	Max.	Unit
System parameters test circuit figure4						
VFB	Feedback Voltage	Vin = 8V to 40V, Vout=5V Iload=0.5A to 5A	1.225	1.25	1.275	V
Efficiency	η	Vin=12V ,Vout=5V Iout=5A	-	87	-	%
Efficiency	η	Vin=24V ,Vout=12V Iout=5A	-	93	-	%

Electrical Characteristics (DC Parameters)

Vin = 12V, GND=0V, Vin & GND parallel connect a 220uf/50V capacitor; Iout=500mA, T_a = 25℃; the others floating unless otherwise specified.

Parameters	Symbol	Test Condition	Min.	Typ.	Max.	Unit
Input operation voltage	Vin		8		36	V
Quiescent Supply Current	I_q	V_{FB} =Vin		2.1	5	mA
Oscillator Frequency	Fosc		144	180	216	KHz
Output Short Frequency	Fosp			48		KHz
Switch Current Limit	I_L	V_{FB} =0		7		A
Max. Duty Cycle	D_{MAX}	V_{FB}=0V		100		%
Output Power PMOS	Rdson	V_{FB}=0V, Vin=12V, I_{SW}=5A		60	80	mohm

深圳市森利威尔电子有限公司
联系人：曾生
联系电话：13534002546
移动QQ：2355368875

Typical System Application (VOUT=5V/5A)

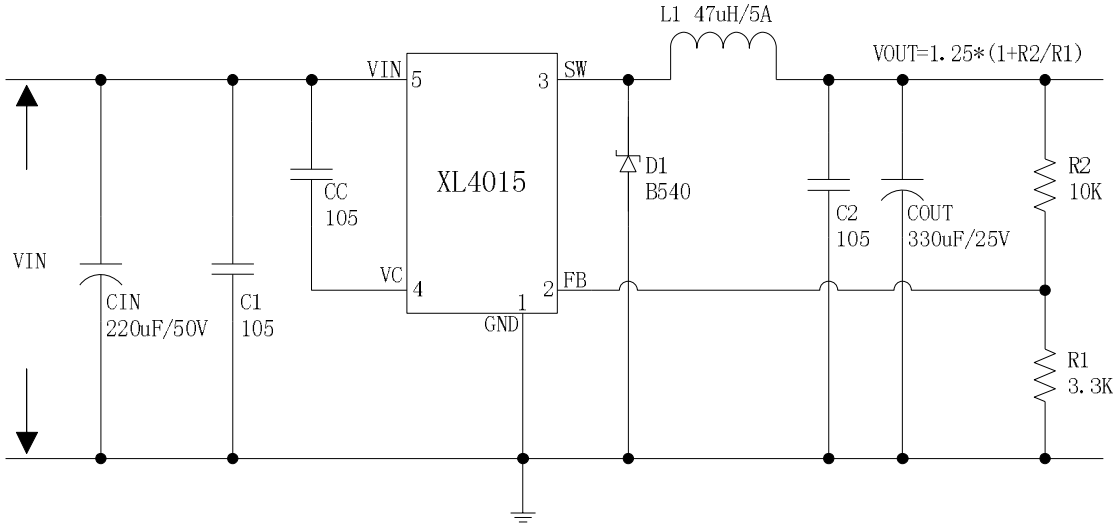

Figure5. XL4015 System Parameters Test Circuit (VIN=8V~36V, VOUT=5V/5A)

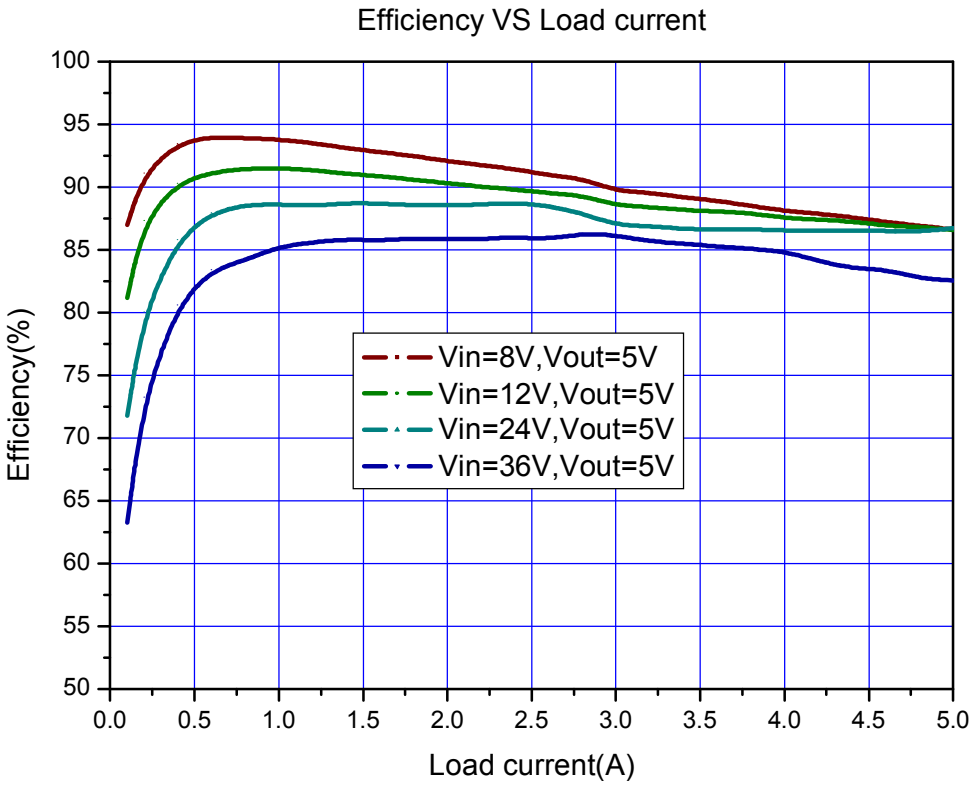

深圳市森利威尔电子有限公司
联系人：曾生
联系电话：13534002546
移动QQ：2355368875

Figure6. XL4015 System Efficiency Curve

Typical System Application (VOUT=12V/5A)

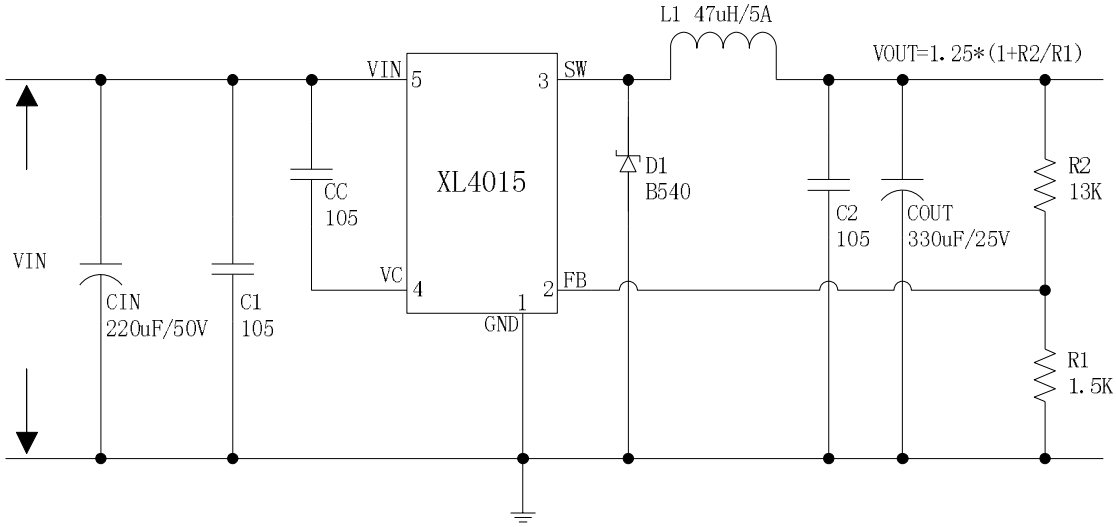

Figure7. XL4015 System Parameters Test Circuit (VIN=15V~36V, VOUT=12V/5A)

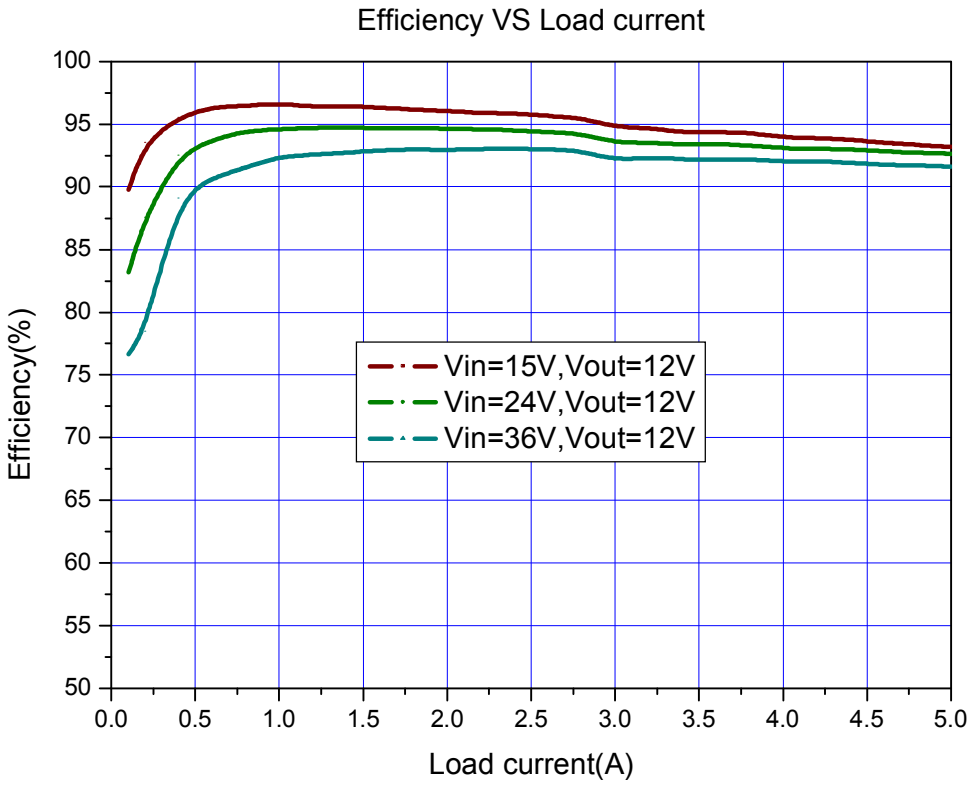

Figure8. XL4015 System Efficiency Curve

深圳市森利威尔电子有限公司
联系人：曾生
联系电话：13534002546
移动QQ：2355368875

Schottky Diode Selection Table

Current	Surface Mount	Through Hole	VR (The same as system maximum input voltage)				
			20V	30V	40V	50V	60V
1A		√	1N5817	1N5818	1N5819		
3A		√	1N5820	1N5821	1N5822		
		√	MBR320	MBR330	MBR340	MBR350	MBR360
	√		SK32	SK33	SK34	SK35	SK36
	√			30WQ03	30WQ04	30WQ05	
		√		31DQ03	31DQ04	31DQ05	
		√	SR302	SR303	SR304	SR305	SR306
5A		√	1N5823	1N5824	1N5825		
		√	SR502	SR503	SR504	SR505	SR506
		√	SB520	SB530	SB540	SB550	SB560
	√		SK52	SK53	SK54	SK55	SK56
	√			50WQ03	50WQ04	50WQ05	

深圳市森利威尔电子有限公司
联系人：曾生
联系电话：13534002546
移动QQ：2355368875

Package Information

TO263-5L

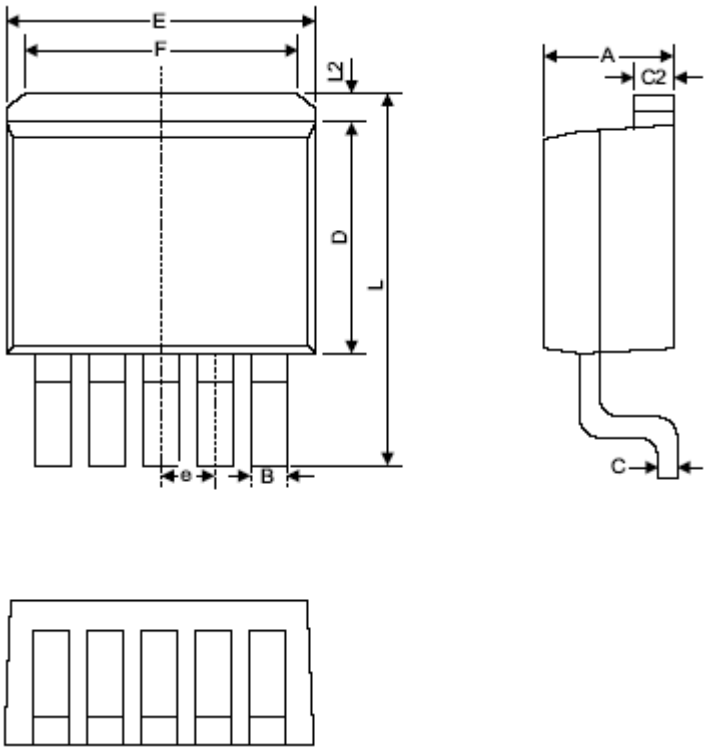

Symbol	Dimensions In Millimeters		Dimensions In Inches	
	Min.	Max.	Min.	Max.
A	4.06	4.83	0.160	0.190
B	0.76	1.02	0.030	0.040
C	0.36	0.64	0.014	0.025
C2	1.14	1.40	0.045	0.055
D	8.64	9.65	0.340	0.380
E	9.78	10.54	0.385	0.415
e	1.57	1.85	0.062	0.073
F	6.60	7.11	0.260	0.280
L	15.11	15.37	0.595	0.605
L2	-	1.40	-	0.055

深圳市森利威尔电子有限公司
联系人：曾生
联系电话：13534002546
移动QQ：2355368875